2MP 22x Starlight IR PTZ

Starlight

IPC6252SR-X22U

150M IR

KEY FEATURES

Optics

- Starlight illumination
- Accurate and fast focusing
- Smart IR, up to 200 m (656 ft) IR distance
- Optical glass window with higher light transmittance
- IR anti-reflection window to increase the infrared transmittance

Streaming

- ONVIF
- Triple Streams
- 1080p@60fps
- Customised OSD

Key Features

- H.265, H.264 (U-Code), MJPEG
- Embedded smart algorithm
- 150M IR
- X2 Alarm In/1x Out
- Audio Input/Output

Structure

- 15° Elevation Angle
- More effective heat dissipation system
- Intelligent temperature control technology
- 6 KV surge protection designed for network interface
- 24V AC

DIMENSIONS

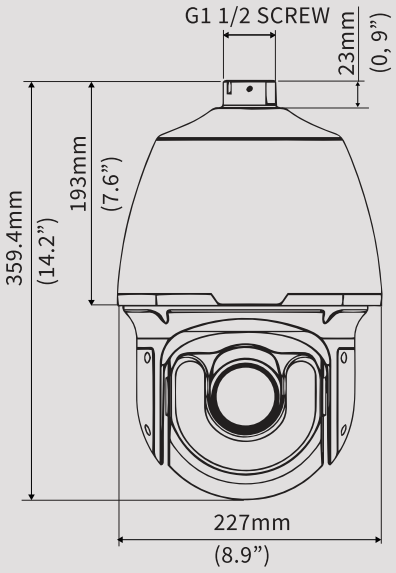

PTZ BRACKETS

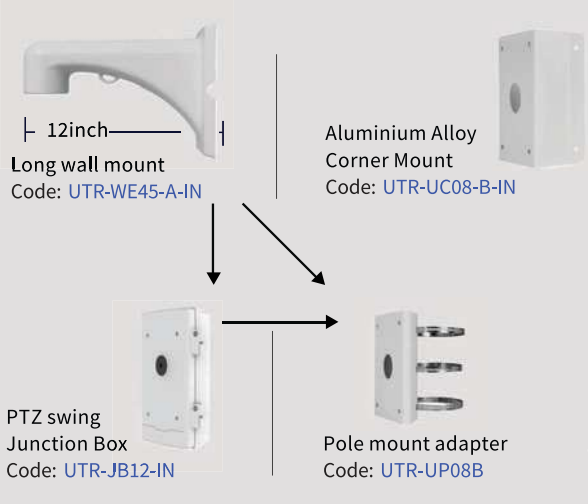

3 YEAR WARRANTY

SPECIFICATION

	IPC6252SR-X22U	IPC6252SR-X22UG
Camera		
Sensor	1/1.9", 2 megapixel, progressive scan, CMOS	
Lens	6.5 ~ 143 mm (22x optical zoom)	
Angle of View	(H) 70° (wide) ~ 3.76° (tele)	
Iris	Auto/Manual; F1.5 ~ F3.4	
Shutter	Auto/Manual; shutter time: 1/6 s ~ 1/100000 s	
Minimum Illumination	Colour: 0.001 Lux (F1.6, AGC ON) 0 Lux with IR	
S/N	>52 dB	
WDR	120 dB	
Day/Night	IR-cut filter with auto switch (ICR)	
Video		
Max. Resolution	1920 × 1080	
Video Compression	H.265, H.264, MJPEG	
Frame Rate	1080P (1920×1080):Max.60 fps	
Video Streaming	Triple streams	
OSD	Up to 8 OSDs	
Privacy Mask	Up to 8 areas	
Digital Zoom	Supported	
Smart		
Behavior Detection	Intrusion, crossing line, motion detection	
Exception Detection	Audio detection	
Intelligent Identification	Face detection	
Statistical Analysis	People counting	
Audio		
Audio Compression	G.711	
Two-way audio	Supported	
Storage		
Edge Storage	Micro SD, up to 128 GB	
Network		
Protocols	L2TP, IPv4, IGMP, ICMP, ARP, TCP, UDP, DHCP, PPPoE, RTP, RTSP, RTCP, DNS, DDNS, NTP, FTP, UPnP, HTTP, HTTPS, SMTP, SIP, 802.1x	
Compatible Integration	ONVIF, API	
Pan & Tilt		
Pan Range	360° (endless)	
Pan Speed	0.1°/s ~ 240°/s Preset speed: 300°/s	
Tilt Range	–15° ~ +90° (auto reverse)	
Tilt Speed	0.1° ~ 160°/s Preset speed: 240°/s	
Number of Preset	256	
Patrol	Preset patrol, route patrol, recorded patrol	
Home Position	Supported	

SPECIFICATION

Interface		
Audio I/O	Audio cable	
	Input: impedance 35 kΩ; amplitude 2 V [p-p]	
	Output: impedance 600 Ω; amplitude 2 V [p-p]	
Alarm I/O	2 / 1	
Serial Port	1 RS485	
Network	10M/100M Base-TX Ethernet	100M Base-FX SFP+10M/100M Base-TX Ethernet
Video Output	1 BNC, impedance 75 Ω; amplitude 1 V [p-p]	
General		
Power	24 V AC (Default), 24 V DC	
	Power consumption: 11~47W	Power consumption: 15 ~51W
Dimensions (Ø x H)	Ø227 x 359.4 mm (Ø8.9” x 14.2”)	
Weight	5.5 kg (12.1 lb)	
Working Environment	–40°C ~ +70°C (-40°F ~ 158°F), Humidity ≤ 95% RH(non-condensing)	
Ingress Protection	IP66	

CAMERA MOUNTS

Installation mode	Accessories
Wall mount	TR-WE45-IN bracket + TR-WE45-A-IN bracket
Corner mount	TR-WE45-IN bracket + TR-UC08-B-IN bracket
Pole mount	TR-WE45-A-IN bracket + TR-UP08-B-IN bracket

Starlight

ULTRA STARLIGHT

“Unbeatable Lowlight Performance – stays in colour"

3 YEAR WARRANTY