WIPSJB Series

Small Sized Junction Boxes for Bullet and Eyeball Cameras

The WIPSJB and WIPSJBG are small sized junction boxes for bullet and eyeball cameras.

WIPSJB

WIPSJBG
(Grey seals are available)

Key Features

- Aluminium alloy material with surface spray treatment
- Dust proof design
- Bottom inlet and side inlet
- Available for wall or ceiling mounting

Specification

Model Number	WIPSJB	WIPSJBG
Material	Aluminium alloy	
Colour	White	Grey
Ingress Protection	IP65	
Working Temperature	-40°C ~ +60°C (-40°F ~ +140°F)	
Working Humidity	10% ~ 90%	
Load Bearing	The wall must be strong enough to withstand at least 3 times the weight of the camera and the junction box.	
Dimensions	112 x 55 mm	
Weight	332g	

Bioaccess Sales Ltd. reserves the right to change specifications without notice.
Please contact your representative to confirm current specifications.

Dimensions (mm)

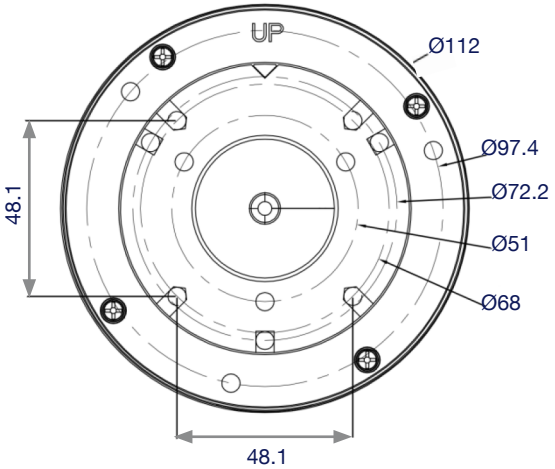

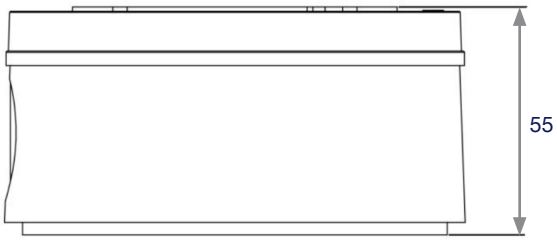

sales@genieproducts.co.uk
www.genieaccess.com
+44 (0) 1707 330 541

British Born Company

© 2019 Bioaccess Sales Ltd. All Rights Reserved.